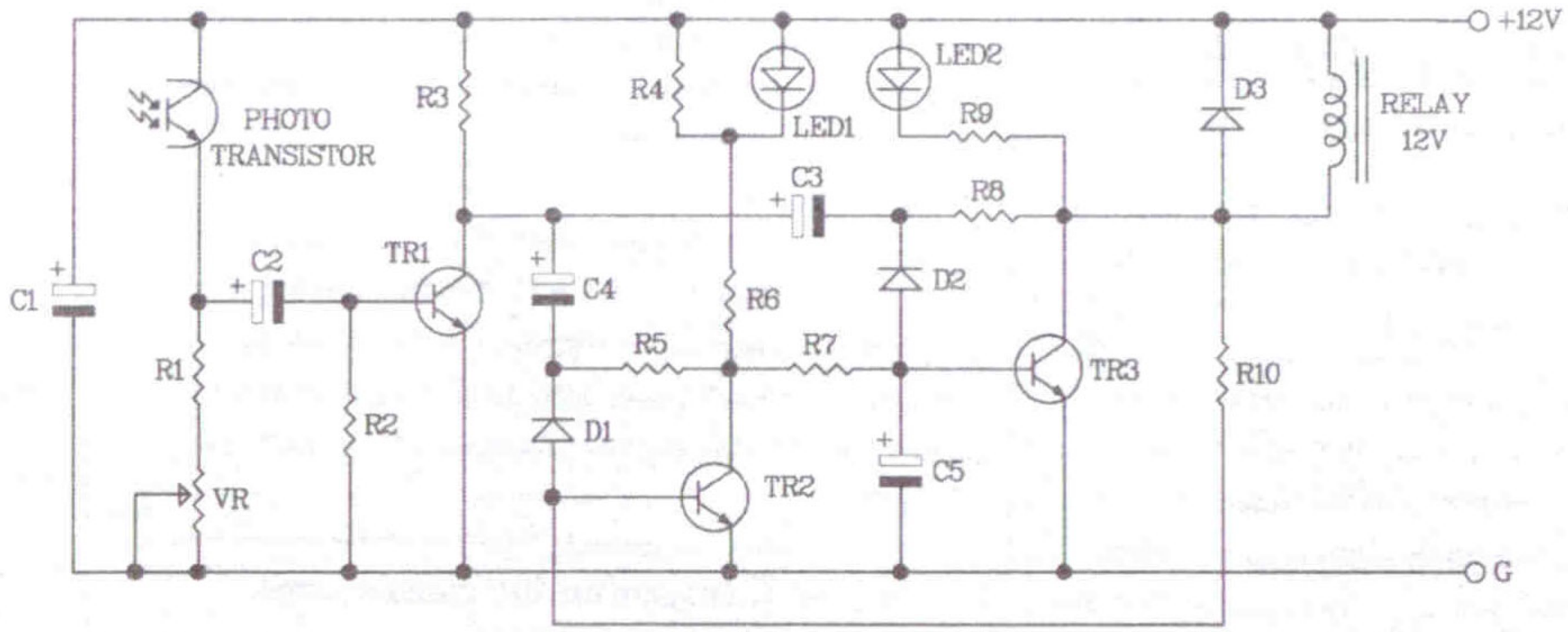

Figure 2. The light remote control switch circuit

Figure 3. Connections

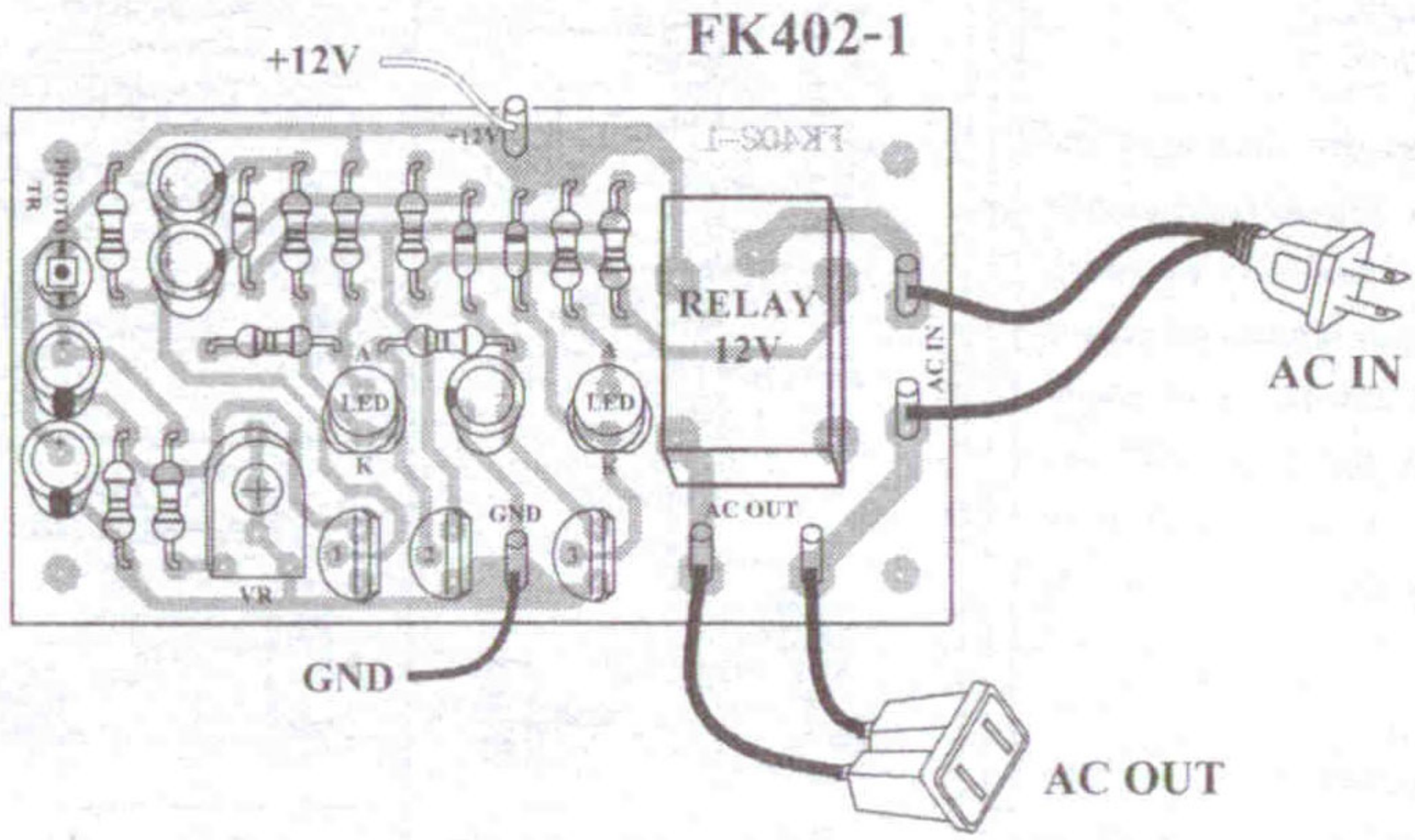

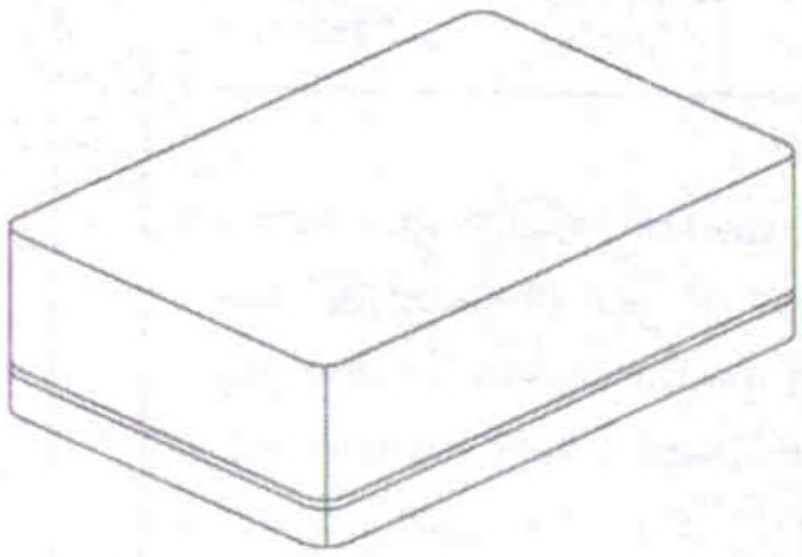

NOTE:

FUTURE BOX FB04 is suitable for this kit.

NEW KIT SET NEW

CODE FK	DESCRIPTION	POWER
161	FEELING FLASHER 14 LED	9-12VDC
162	SATURN'S RING FLASHER 31 LED	9-12VDC
163	UNIVERSAL FLASHER 10 LED	9VDC
164	XENON TUBE FLASHER (STRAIGHT TYPE)	220VAC
165	SOUND ACTIVATED XENON FLASHER (STRAIGHT TYPE)	220VAC
166	LIGHT ACTIVATED XENON FLASHER (STRAIGHT TYPE)	220VAC